Standard MRU-M Rail

Tapped from bottom.

Dimensions in mm.

Please note that blocks and rails are not sold separately for sizes 2 and 3. Due to the small dimensions, blocks and sliders must be assembled and matched carefully to ensure correct quality and tolerances.

Material: Stainless steel



Every care has been taken to ensure the accuracy of the information in this document, but we take no liability for any errors or omissions. We reserve the right to make changes without prior notice.

General Data

Designation	Weight Rail (g/m)
MRU2M	28
MRU3M	53
MRU5M	116
MRU7M	215
MRU9M	301
MRU12M	602
MRU15M	930

Dimensions

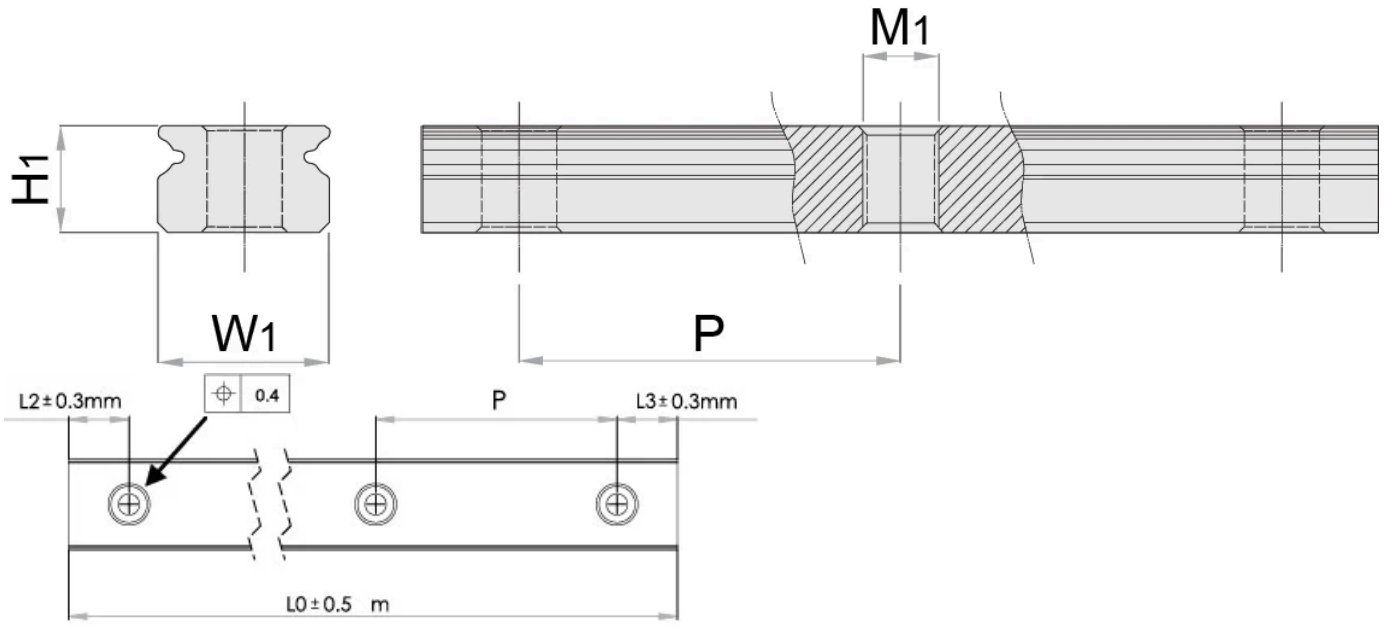

Designation	H1	W1	Hole Pitch (P)	M1
MRU2M	-	2	8	M1x0.25
MRU3M	2.6	3	10	M1.6x0.35
MRU5M	3.5	5	15	M3x0.5
MRU7M	4.7	7	15	M3x0.5
MRU9M	5.5	9	20	M4x0.7
MRU12M	7.5	12	25	M4x0.7
MRU15M	9.5	15	40	M4x0.7

Every care has been taken to ensure the accuracy of the information in this document, but we take no liability for any errors or omissions. We reserve the right to make changes without prior notice.