FTSU

Aluminium with mounting holes.

Standard section length L = 4000 mm. Lengths other than standard (Lmax = 4000 mm) are also available on request.

Support rails can be supplied upon request, with or without mounting holes. No anodizing in holes.

Dimensions in mm.

Note: The shaft is not included, please order separately.

Material: Aluminium



Every care has been taken to ensure the accuracy of the information in this document, but we take no liability for any errors or omissions. We reserve the right to make changes without prior notice.

Dimensions

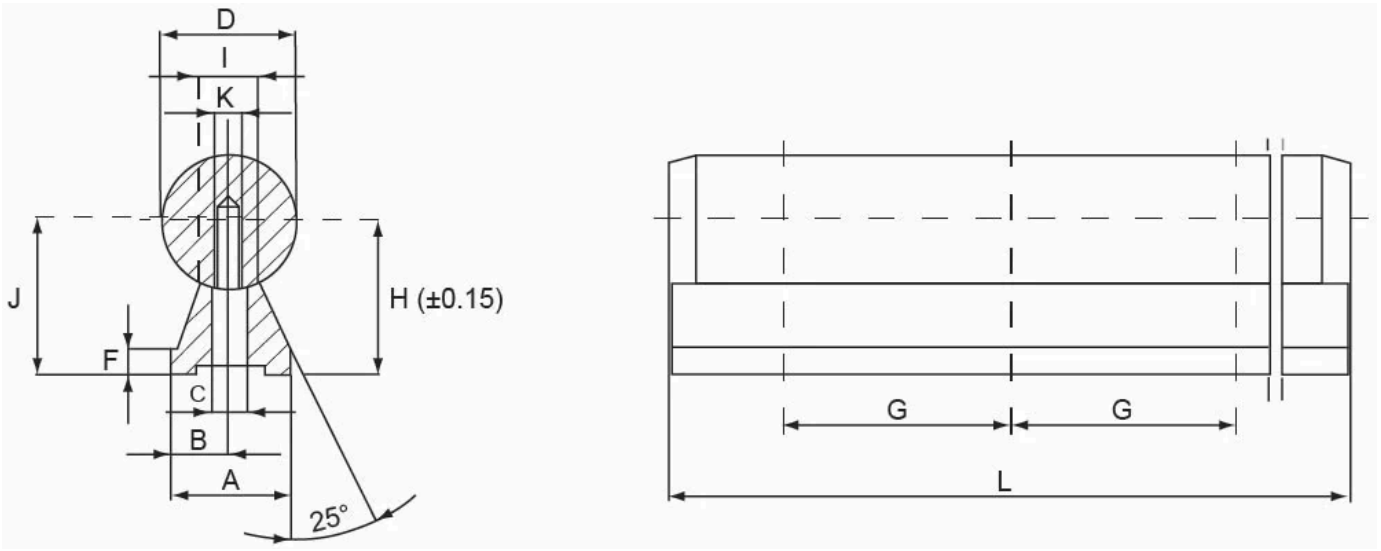

Designation	Remark	G	A	B	H	D	K	F	C
FTSU16G	Standard section length L = 4000 mm	100	14	7	18	16	M5	3	5.5
FTSU20G	Standard section length L = 4000 mm	100	17	8.5	22	20	M6	3	6.6
FTSU25G	Standard section length L = 4000 mm	120	21	10.5	26	25	M8	3	9
FTSU30G	Standard section length L = 4000 mm	150	23	11.5	30	30	M10	3	11
FTSU40G	Standard section length L = 4000 mm	200	40	15	39	40	M10	4	13.5

Designation	I	J
FTSU16G	7	19
FTSU20G	8.1	23
FTSU25G	10.3	28.5
FTSU30G	11	32
FTSU40G	15	39.5

Every care has been taken to ensure the accuracy of the information in this document, but we take no liability for any errors or omissions. We reserve the right to make changes without prior notice.