Fixing System

The linear units are mounted by using fixtures which are placed in the slot on the side of the profile.
Linear unit must be mounted by the aluminium profile.

Recommended number of clamping fixtures:
For T1 is recommended 6 pcs. per meter on each side.
For T2 is recommended 3 pcs. per meter on each side .
For T3 is recommended 3 pcs. per meter on each side.

Contact Rollco for CAD-files.

Dimensions in mm.



Every care has been taken to ensure the accuracy of the information in this document, but we take no liability for any errors or omissions. We reserve the right to make changes without prior notice.

General Data

MTJ, MRJ, MTV, MTJ ECO

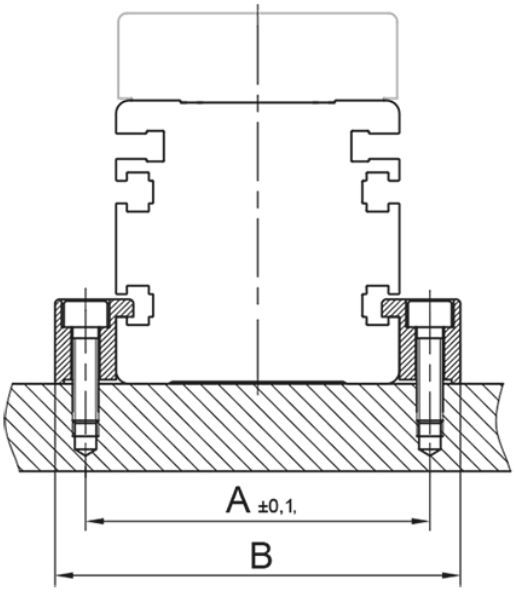

CTV, CTJ

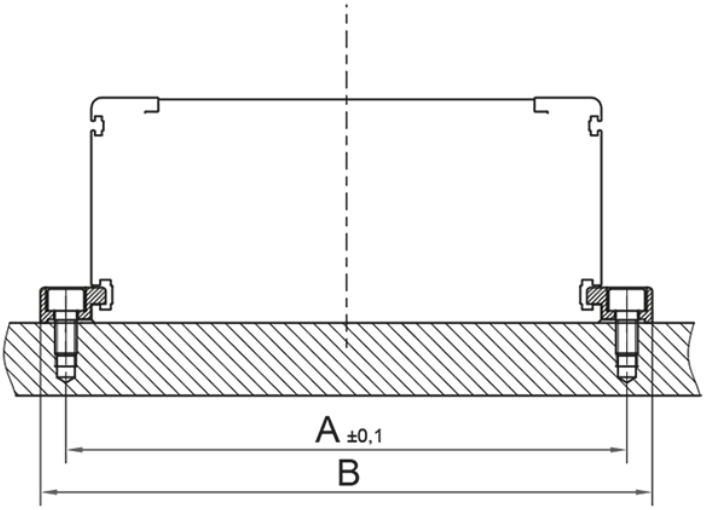

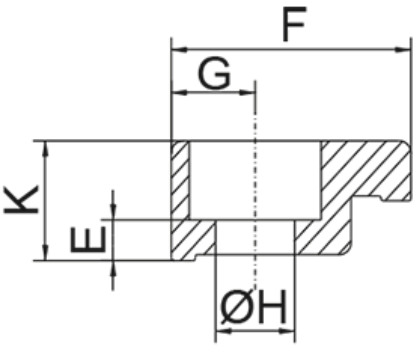

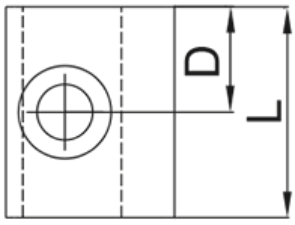

T1

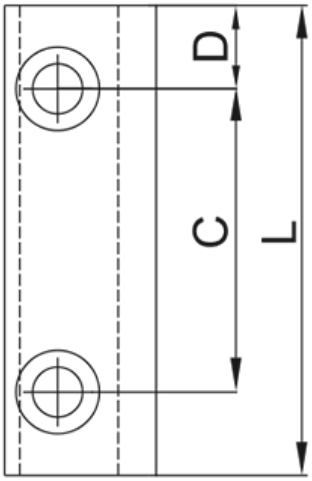

T2

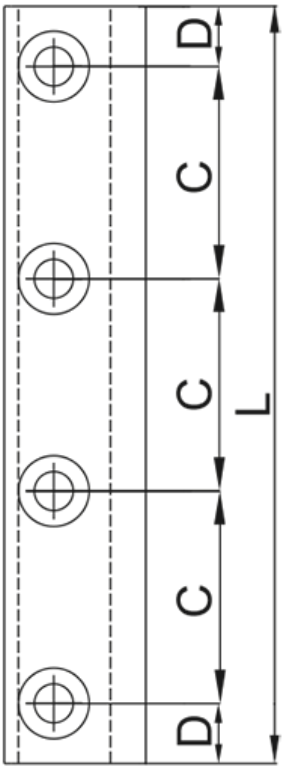

T3

Designation	Compatible with	Type	A	B	C
Fixing system 37129	MTJ, MRJ, MTV 65	T2	78	93	40
Fixing system 37129	MTJ, MRJ, MTV 80	T2	93	108	40
Fixing system 44375	MTJ, MRJ, MTV 110	T2	130	150	40

Every care has been taken to ensure the accuracy of the information in this document, but we take no liability for any errors or omissions. We reserve the right to make changes without prior notice.

Designation	Compatible with	Type	A	B	C
Fixing system 40728	MTJ ECO 40	T2	52	66	40
Fixing system 46994	CTV, CTJ 90	T1	102	112	/
Fixing system 48636	CTV, CTJ 90	T2	102	112	40
Fixing system 47163	CTV, CTJ 90	T3	102	112	20
Fixing system 55261	CTV, CTJ 90	T3	102	112	25
Fixing system 55638	CTV, CTJ 90	T3	102	112	30
Fixing system 48643	CTV, CTJ 110	T2	126	140	40
Fixing system 46995	CTV, CTJ 110	T3	126	140	30
Fixing system 55260	CTV, CTJ 110	T3	126	140	40
Fixing system 48642	CTV, CTJ 145	T1	161	175	/
Fixing system 48643	CTV, CTJ 110	T2	126	140	40
Fixing system 48640	CTV, CTJ 145	T3	161	175	20
Fixing system 46995	CTV, CTJ 110	T3	126	140	30
Fixing system 53049	CTV, CTJ 200	T2	222	240	40
Fixing system 53050	CTV, CTJ 200	T2	222	240	50
Fixing system 53051	CTV, CTJ 200	T2	222	240	70
Fixing system 37139	MTJ, MRJ 40	T2	50	64.4	40

Designation	D	E	F	G	H	K
Fixing system 37129	10	11.5	20	7.5	Ø 6.5	20
Fixing system 37129	10	11.5	20	7.5	Ø 6.5	20
Fixing system 44375	10	18	30	10	Ø 8.5	27
Fixing system 40728	7.5	14.5	20	7	Ø 5.5	20
Fixing system 46994	12.5	4.5	15	5	Ø 4.5	9
Fixing system 48636	11	4.5	15	5	Ø 4.5	9
Fixing system 47163	8.5	4.5	15	5	Ø 4.5	9
Fixing system 55261	6	4.5	15	5	Ø 4.5	9
Fixing system 55638	8.5	4.5	15	5	Ø 4.5	9
Fixing system 48643	11	3.4	20	7	Ø 6.6	10
Fixing system 46995	8.5	4.5	20	7	Ø 5.5	10
Fixing system 55260	11	3.4	20	7	Ø 6.6	10
Fixing system 48642	12.5	3.4	20	7	Ø 6.6	10
Fixing system 48643	11	3.4	20	7	Ø 6.6	10
Fixing system 48640	8.5	4.5	20	7	Ø 5.5	10
Fixing system 46995	8.5	4.5	20	7	Ø 5.5	10
Fixing system 53049	19	14.8	29	9	Ø 8.5	27.5
Fixing system 53050	19	14.8	29	9	Ø 8.5	27.5
Fixing system 53051	19	16.3	29	9	Ø 8.5	27.5
Fixing system 37139	7.5	2.5	15	7.2	Ø 5.5	8

Designation	L	Screw Type	Countersink for	Weight (kg)
Fixing system 37129	60	M6	DIN 912	0.054
Fixing system 37129	60	M6	DIN 912	0.054
Fixing system 44375	60	M8	DIN 912	0.082
Fixing system 40728	55	M5	DIN 912	0.035
Fixing system 46994	25	M4	DIN 912	0.01

Every care has been taken to ensure the accuracy of the information in this document, but we take no liability for any errors or omissions. We reserve the right to make changes without prior notice.

Designation	L	Screw Type	Countersink for	Weight (kg)
Fixing system 48636	62	M4	DIN 912	0.02
Fixing system 47163	77	M4	DIN 912	0.025
Fixing system 55261	87	M4	DIN 912	0.028
Fixing system 55638	107	M4	DIN 912	0.031
Fixing system 48643	62	M6	DIN 912	0.03
Fixing system 46995	107	M5	DIN 912	0.045
Fixing system 55260	142	M6	DIN 912	0.056
Fixing system 48642	25	M6	DIN 912	0.01
Fixing system 48643	62	M6	DIN 912	0.03
Fixing system 48640	77	M5	DIN 912	0.03
Fixing system 46995	107	M5	DIN 912	0.045
Fixing system 53049	78	M8	DIN 912	0.11
Fixing system 53050	88	M8	DIN 912	0.12
Fixing system 53051	108	M8	DIN 912	0.16
Fixing system 37139	55	M5	DIN 912	0.014

Every care has been taken to ensure the accuracy of the information in this document, but we take no liability for any errors or omissions. We reserve the right to make changes without prior notice.