MCE



Mini electric cylinder MCE is a mini linear drive with a piston rod. By using an integrated precision ball screw drive, the rotary motion (rotation) of the drive shaft is converted to the linear motion (translation) of the piston rod with high mechanical efficiency and low internal friction.

A preassembled standard motor (in-line with a motor adapter and a coupling or in-parallel with a motor sidedrive and a timing belt) together with the standard drive, makes the system plug and play ready. Compact dimensions and optimally selected motor combinations cover a wide range of applications.

The aluminium cylinder profile includes T-slots on the bottom for fixing the electric cylinder, as well as side slots for clamping fixtures and magnetic field sensors.

Options, such as female piston rod end and extended piston rod, together with a wide range of accessories make this product highly flexible. There is also an option of the mini electric cylinder without the preassembled motor if an individual motor is required.

For applications, where higher resistance to lateral loads or torsional moments is required, a guiding unit GUC can be used. By using the guiding unit, which offers high precision guiding and positioning, the mini electric cylinders can easily be combined to the multi-axis systems.

Each MCE is optimally pre-lubricated and ready for a maintenance-free operating process.

Note!
All the data of the dynamic load capacities (ball screw drive) stated in the tables are theoretical without considering any safety factor. The safety factor depends on the application and its requested safety and service life.

We recommend a minimum dynamic safety factor of 5,0 or more. Please refer to the Technical Information document where calculation of the safety factor of the ball screw drive and how the applied load affects the service life are presented.

All dimensions are in mm. The scale of the drawings may not be equal.

Please see the attached Technical information document for further information and data.

Contact us if you have questions or need additional information.

Absolute Stroke: 25, 50, 75, 100, 125, 150, 175, 200
Max. Stroke (mm): 200
Max. Repeatability (mm): ±0.015 (valid for one-directional axial load)
Max. Acceleration (m/s): 20

Every care has been taken to ensure the accuracy of the information in this document, but we take no liability for any errors or omissions. We reserve the right to make changes without prior notice.

Max. Angle of Piston Rod Rotation: ≤ ±1 ° (refers to device in new condition)
Width (mm): 25.0 / 32.0 / 45.0 (cylinder profile)
Height (mm): 25.0 / 32.0 / 45.0 (cylinder profile)
Ambient Temperature (°C): 0 – +50 (0 – +60 without a motor)
Protection Class: IP40
Duty Cycle: 100%
Maintenance: Life-time pre-lubricated

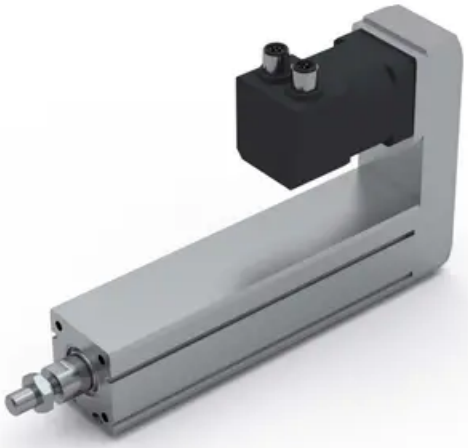



Combination with a standard motor and a motor adapter VK

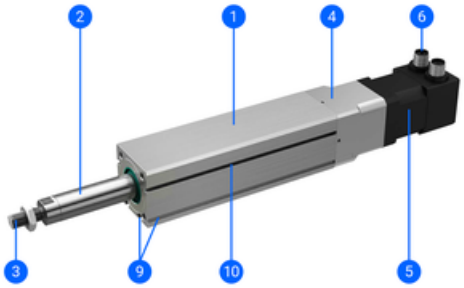

1 – Compact aluminium cylinder profile
2 – Piston rod (stainless steel) with an anti-rotation device
3 – Piston rod end (optionally a female thread is available)
4 – Motor adapter VK with a coupling
5 – Preassembled motor (with/without brake)
6 – Standard connectors (motor, encoder and brake – optionally)
9 – Slots for mounting
10 – Slots for the magnetic field sensors (size 32 and 45) or mounting the sensor holder (size 25)

Combination with a standard motor and a motor side drive MSD

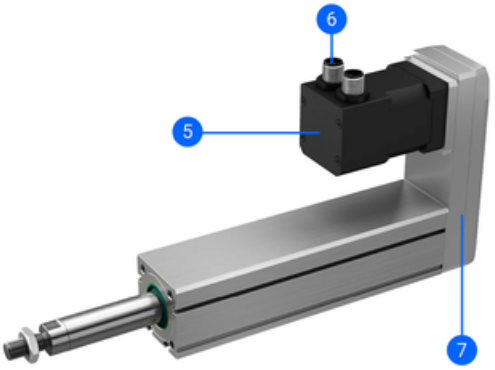

5 – Preassembled motor (with/without brake)
6 – Standard connectors (motor, encoder and brake – optionally)
7 – Motor side drive with a timing belt

Every care has been taken to ensure the accuracy of the information in this document, but we take no liability for any errors or omissions. We reserve the right to make changes without prior notice.

Without a motor

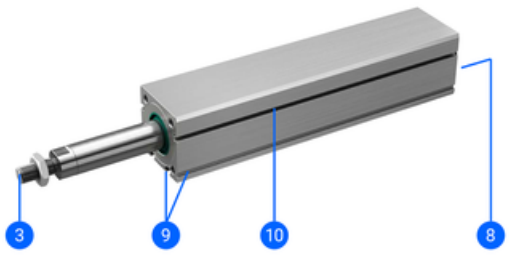

3 – Piston rod end (optionally a female thread is available)
8 – Drive shaft of a precision ball screw drive
9 – Slots for mounting
10 – Slots for the magnetic field sensors (size 32 and 45) or mounting the sensor holder (size 25)

General Data

Max. permissible axial load and payload values depends on the selected motor, travel speed and acceleration of the piston rod.

Max. permissible axial load, payload and max. travel speed values are valid for the entire stroke range. Guiding unit GUC is not taken into consideration.

Max. horizontal permissible payload value is valid for the payload supported by an external guiding (coefficient of friction 0,1 is taken into consideration).

Dynamic axial load capacity of the ball screw drive value is the basis for calculating the service life.

The moved mass is already considered in the equation for calculating the mass of the mini electric cylinder m_{MCE} and the mass moment of inertia J_{MCE}. The moved mass includes the mass of the piston rod with the internal anti-rotation device and ball nut.

For combination with standard motor and motor adapter VK or motor side drive MSD, the mass of the mini electric cylinder m_{MCE}, should be increased by mass of the motor and motor adapter VK or mass of the motor and motor side drive MSD respectively. See table below.

Mass and moved mass of the guiding unit GUC are not included in the moved mass $m_{m,MCE}$, in the mass m_{MCE} and in the mass moment of inertia J_{MCE}. Please refer to the guiding unit for more information.

Abs. stroke	Absolute stroke [mm]
E	Extended piston rod [mm]
m_{load}	Applied mass to be moved [kg]

Every care has been taken to ensure the accuracy of the information in this document, but we take no liability for any errors or omissions. We reserve the right to make changes without prior notice.

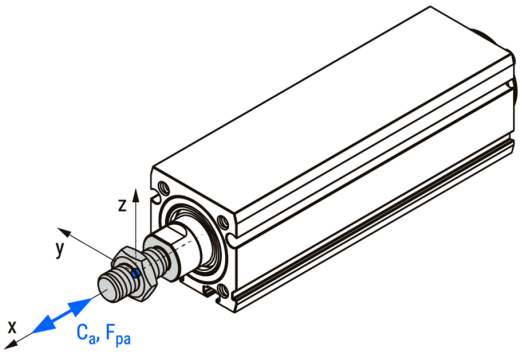

Designation	Description	Ball Screw (d x l)	Max. Drive Torque M_p (Nm)	Max. Travel Speed Vmax (m/s)	Max. Rotational Speed nmax (min^{-1}) (rev/min)
MCE25-6x2	Without motor	6 × 2 mm	0.06	0.150	4500
MCE25-6x6	Without motor	6 × 6 mm	0.10	0.450	4500
MCE32-8x2	Without motor	8 × 2 mm	0.13	0.150	4500
MCE32-8x8	Without motor	8 × 8 mm	0.53	0.600	4500
MCE45-10x3	Without motor	10 × 3 mm	0.37	0.225	4500
MCE45-10x10	Without motor	10 × 10 mm	1.23	0.750	4500

Designation	No Load Torque M_0 (Nm)	Axial Dynamic Load Capacity Ca (N)	Max. Permissible Axial Load Fpa (N)	Max. Permissible Payload Horizontal mph (kg)	Max. Permissible Payload Vertical mpv (kg)	Max. Permissible Radial Load on Shaft Fpr (N)
MCE25-6x2	0.02	1900	170	57	14	25
MCE25-6x6	0.02	1700	90	30	7	25
MCE32-8x2	0.04	2000	375	126	31	50
MCE32-8x8	0.05	1500	375	126	31	50
MCE45-10x3	0.07	3500	695	233	58	100
MCE45-10x10	0.09	3200	695	233	58	100

Designation	Moved Mass (kg)	Mass of the Mini Electric Cylinder mMCE (kg)	Mass Moment of Inertia JMCE (10^{-2} kg cm^2)	Planar Moment of Inertia Iy (cm^4)	Planar Moment of Inertia Iz (cm^4)
MCE25-6x2	0.06 + 0.0004 × Abs. stroke + 0.0004 × E	0.15 + 0.0013 × Abs. stroke + 0.0004 × E	0.28 + 0.0007 × Abs. stroke + 0.00004 × E + 0.1013 × mload	2.10 (cylinder profile)	1.98 (cylinder profile)
MCE25-6x6	0.06 + 0.0004 × Abs. stroke + 0.0004 × E	0.15 + 0.0013 × Abs. stroke + 0.0004 × E	0.33 + 0.0011 × Abs. stroke + 0.00036 × E + 0.9119 × mload	2.10 (cylinder profile)	1.98 (cylinder profile)
MCE32-8x2	0.12 + 0.0005 × Abs. stroke + 0.0005 × E	0.31 + 0.0023 × Abs. stroke + 0.0005 × E	0.70 + 0.0025 × Abs. stroke + 0.00005 × E + 0.1013 × mload	6.42 (cylinder profile)	6.58 (cylinder profile)
MCE32-8x8	0.12 + 0.0005 × Abs. stroke + 0.0005 × E	0.31 + 0.0023 × Abs. stroke + 0.0005 × E	0.88 + 0.0033 × Abs. stroke + 0.00077 × E + 1.6211 × mload	6.42 (cylinder profile)	6.58 (cylinder profile)
MCE45-10x3	0.20 + 0.0010 × Abs. stroke + 0.0010 × E	0.67 + 0.0043 × Abs. stroke + 0.0010 × E	2.77 + 0.0057 × Abs. stroke + 0.00022 × E + 0.2280 × mload	25.37 (cylinder profile)	25.6 (cylinder profile)

Every care has been taken to ensure the accuracy of the information in this document, but we take no liability for any errors or omissions. We reserve the right to make changes without prior notice.

Designation	Moved Mass (kg)	Mass of the Mini Electric Cylinder mMCE (kg)	Mass Moment of Inertia JMCE (10^{-2} kg cm²)	Planar Moment of Inertia Iy (cm⁴)	Planar Moment of Inertia Iz (cm⁴)
MCE45-10x10	0.20 + 0.0010 × Abs. stroke + 0.0010 × E	0.67 + 0.0043 × Abs. stroke + 0.0010 × E	3.23 + 0.0081 × Abs. stroke + 0.00249 × E + 2.5330 × mload	25.37 (cylinder profile)	25.6 (cylinder profile)

Dimensions

MCE without a motor

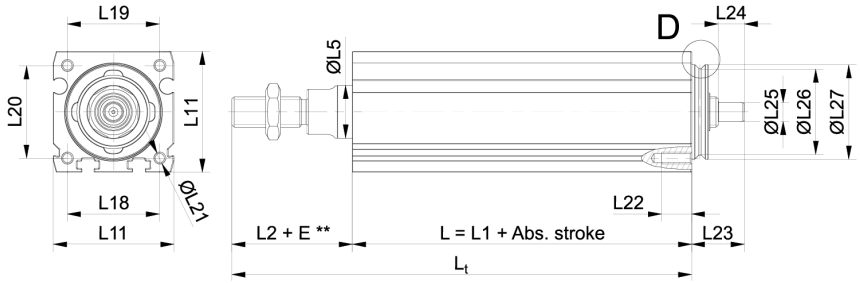

Female thread

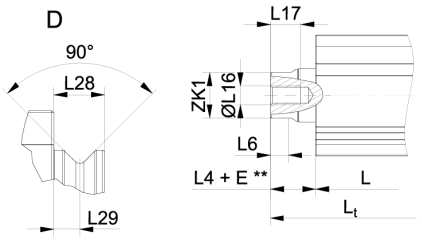

Designation	L1	L2	L3	L4	L5	L6	L7	L8	L9
MCE25-6x2	50	26	16	10	Ø 12	3.5	Ø M6 × 1	3.2	8
MCE25-6x6	50	26	16	10	Ø 12	3.5	Ø M6 × 1	3.2	8
MCE32-8x2	65	32	20	12	Ø 14	5.5	Ø M8 × 1.25	4	8
MCE32-8x8	65	32	20	12	Ø 14	5.5	Ø M8 × 1.25	4	8
MCE45-10x3	80	38	22	16	Ø 18	7	Ø M10 × 1.25	5	12
MCE45-10x10	80	38	22	16	Ø 18	7	Ø M10 × 1.25	5	12

Designation	L10	L11	L12	L13	L14	L15	L16	L17	L18	L19
MCE25-6x2	Ø M2.5	25	21	13.5	19.25	4.4	Ø M4	8	19	17
MCE25-6x6	Ø M2.5	25	21	13.5	19.25	4.4	Ø M4	8	19	17
MCE32-8x2	Ø M4	32	22	13.5	22.8	4.4	Ø M5	8	24.5	24.5
MCE32-8x8	Ø M4	32	22	13.5	22.8	4.4	Ø M5	8	24.5	24.5
MCE45-10x3	Ø M6	45	32	20	30.5	4.4	Ø M6	12	34	34
MCE45-10x10	Ø M6	45	32	20	30.5	4.4	Ø M6	12	34	34

Designation	L20	L21	L22	L23	L24	L25	L26	L27	L28	L29
MCE25-6x2	18	Ø M2.5	8	14	7	Ø 5 (h7)	Ø 17.6	Ø 20 (h7)	4.5	2.3
MCE25-6x6	18	Ø M2.5	8	14	7	Ø 5 (h7)	Ø 17.6	Ø 20 (h7)	4.5	2.3
MCE32-8x2	24.5	Ø M3	8	14	7	Ø 5 (h7)	Ø 22.6	Ø 25 (h7)	4.5	2.3
MCE32-8x8	24.5	Ø M3	8	14	7	Ø 5 (h7)	Ø 22.6	Ø 25 (h7)	4.5	2.3
MCE45-10x3	34	Ø M4	10	16	8	Ø 8 (h7)	Ø 31.6	Ø 34 (h7)	4.5	2.3
MCE45-10x10	34	Ø M4	10	16	8	Ø 8 (h7)	Ø 31.6	Ø 34 (h7)	4.5	2.3

Designation	ZK1	ZK2	U1	U2	U3	U4	U5
MCE25-6x2	10	10	2.2	4.2	2.8	1.4	1

Every care has been taken to ensure the accuracy of the information in this document, but we take no liability for any errors or omissions. We reserve the right to make changes without prior notice.

Designation	ZK1	ZK2	U1	U2	U3	U4	U5
MCE25-6x6	10	10	2.2	4.2	2.8	1.4	1
MCE32-8x2	12	13	3.2	5.8	3.6	2	1
MCE32-8x8	12	13	3.2	5.8	3.6	2	1
MCE45-10x3	16	17	4.2	7.5	4.7	2.5	1.2
MCE45-10x10	16	17	4.2	7.5	4.7	2.5	1.2

Every care has been taken to ensure the accuracy of the information in this document, but we take no liability for any errors or omissions. We reserve the right to make changes without prior notice.