3560 - 100% Extension

All dimensions in mm.

System Load Capacity value refers to a pair of rails.

Material: Slide members and component parts - stainless SUS304. Balls - SUS304.
Extension: 100%



Every care has been taken to ensure the accuracy of the information in this document, but we take no liability for any errors or omissions. We reserve the right to make changes without prior notice.

General Data

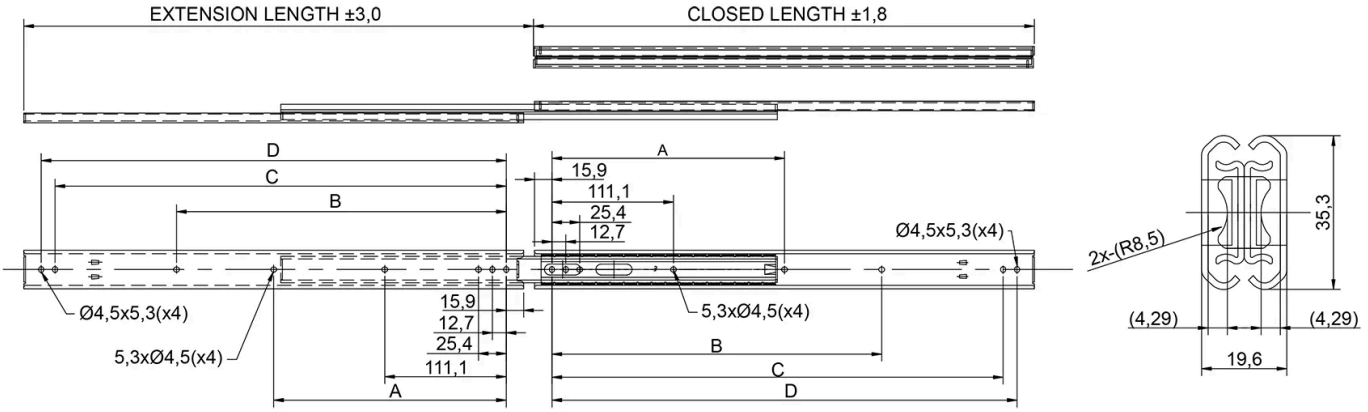

Designation	Closed Length	Extension Length	System Load Capacity (N)	Weight/pc (kg)
3560-250	254	264	600	0.5
3560-300	304.8	314.8	600	0.61
3560-350	355.6	365.6	600	0.72
3560-400	406.4	416.4	600	0.83
3560-450	457.2	467.2	600	0.93
3560-500	508	518	600	1.04
3560-550	558.8	568.8	500	1.15
3560-600	609.6	619.6	450	1.24
3560-650	660.4	670.4	400	1.35
3560-700	711.2	721.2	320	1.43

Dimensions

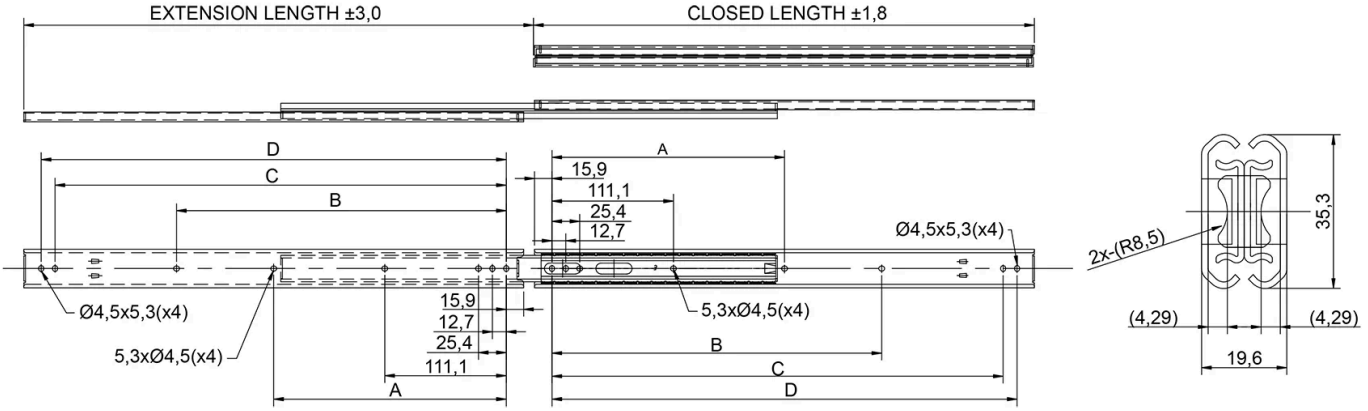

Designation	A	B	C	D
3560-250	-	-	209.5	222.2
3560-300	-	149.2	260.3	273.0
3560-350	-	200.0	311.1	323.8
3560-400	-	250.8	361.9	374.6
3560-450	212.7	301.6	412.7	425.4
3560-500	238.1	352.4	463.5	476.2
3560-550	263.5	403.2	514.3	527.0

Every care has been taken to ensure the accuracy of the information in this document, but we take no liability for any errors or omissions. We reserve the right to make changes without prior notice.

Designation	A	B	C	D
3560-600	288.9	454.0	565.1	577.8
3560-650	314.3	504.8	615.9	628.6
3560-700	339.7	555.6	666.7	679.4

Every care has been taken to ensure the accuracy of the information in this document, but we take no liability for any errors or omissions. We reserve the right to make changes without prior notice.