3080 - R Lock in / Lock out - 100% Extension

Telescopic slide with integrated locking system.



The 3080 - R Lock in / Lock out rails are right-handed as standard, but can also be mounted upside down on the left-hand side. In such cases, the locking lever is operated by lifting it upwards instead of pushing it downwards.

For most applications, the 3080 - R Lock in / Lock out can be combined with the 3080 rail without a locking function. For wider installations, lockable rails on both sides are recommended for improved stability.

Left-hand versions and intermediate stroke lengths are available upon request. Minimum order quantities apply, and delivery times may be longer. Please contact Rollco for more information.

All dimensions in mm.
System Load Capacity value refers to a pair of rails.

Material: Cold-drawn steel profile, zinc plated
Extension: 100%

Every care has been taken to ensure the accuracy of the information in this document, but we take no liability for any errors or omissions. We reserve the right to make changes without prior notice.

General Data

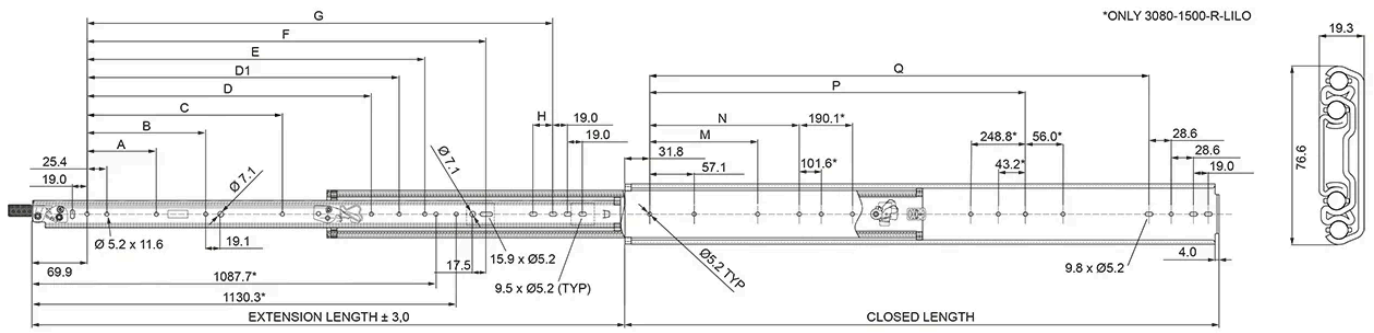

Designation	Closed Length	Extension Length	System Load Capacity (N)	Weight/pc (kg)
3080-400-R-LILO	406.4	406.4	1780	2.09
3080-500-R-LILO	508	508	1780	2.62
3080-600-R-LILO	609.6	609.6	1690	3.14
3080-700-R-LILO	711.2	711.2	1600	3.65
3080-800-R-LILO	812.8	812.8	1510	4.18
3080-900-R-LILO	914.4	914.4	1420	4.71
3080-1000-R-LILO	1016	1016	1330	5.23
3080-1100-R-LILO	1117.6	1117.6	1240	5.75
3080-1200-R-LILO	1219.2	1219.2	1150	6.27
3080-1300-R-LILO	1320.8	1320.8	1060	6.78
3080-1400-R-LILO	1422.4	1422.4	1020	7.28
3080-1500-R-LILO	1524	1524	890	7.85

Dimensions

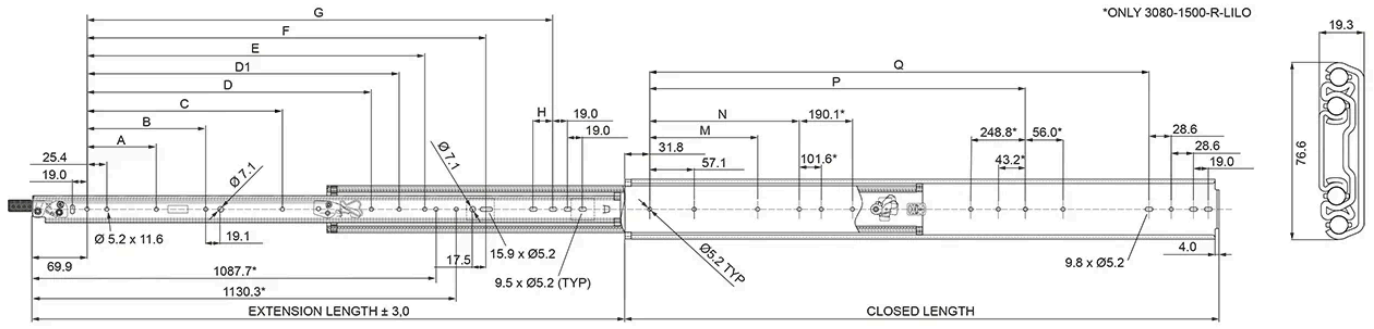

Designation	A	B	C	D	D1	E	F	G	H
3080-400-R-LILO	88.9	-	-	-	-	-	-	242.9	-
3080-500-R-LILO	88.9	152.4	-	-	-	-	-	344.5	-
3080-600-R-LILO	88.9	152.4	-	-	-	-	360.4	446.1	25.4
3080-700-R-LILO	88.9	152.4	-	-	-	-	462	547.7	25.4
3080-800-R-LILO	88.9	152.4	330.2	-	-	-	563.3	649.3	25.4
3080-900-R-LILO	88.9	152.4	330.2	482.6	-	-	665.2	750.9	25.4
3080-1000-R-LILO	88.9	152.4	330.2	584.2	-	-	766.8	852.5	25.4
3080-1100-R-LILO	88.9	152.4	330.2	685.8	-	787.4	868.4	954.1	25.4

Every care has been taken to ensure the accuracy of the information in this document, but we take no liability for any errors or omissions. We reserve the right to make changes without prior notice.

Designation	A	B	C	D	D1	E	F	G	H
3080-1200-R-LILO	88.9	152.4	330.2	685.8	725.6	787.4	970	1055.7	25.4
3080-1300-R-LILO	88.9	152.4	330.2	736.6	-	787.4	1071.6	1157.3	25.4
3080-1400-R-LILO	88.9	152.4	330.2	736.6	-	787.4	1173.2	1258.9	25.4
3080-1500-R-LILO	88.9	152.4	330.2	584.2	-	787.4	1271.4	1360.5	25.4

Designation	M	N	P	Q
3080-400-R-LILO	-	-	-	285.7
3080-500-R-LILO	-	-	-	387.3
3080-600-R-LILO	-	-	-	488.9
3080-700-R-LILO	-	-	-	590.5
3080-800-R-LILO	215.8	-	533.4	692.1
3080-900-R-LILO	215.8	-	635	793.7
3080-1000-R-LILO	215.8	-	736.6	895.3
3080-1100-R-LILO	215.8	-	838.2	996.9
3080-1200-R-LILO	215.8	387.7	939.7	1098.5
3080-1300-R-LILO	215.8	577.8	939.7	1200.1
3080-1400-R-LILO	215.8	577.8	939.7	1307.1
3080-1500-R-LILO	215.8	476.2	995.7	1403.3

Every care has been taken to ensure the accuracy of the information in this document, but we take no liability for any errors or omissions. We reserve the right to make changes without prior notice.