Base Plate

For retaining knuckle feet, rollers, hooks or similar components.
Screws to the face end of profiles.
Material: Die-cast zinc with a black powder coat.

Recommended screws:
D5.5 = galvanised M5 × 30 screw (DIN912)
D7 = galvanised M6 × 30 screw (DIN912)

System: 30 - Slot 6; 20 - Slot 5
Type: Feet

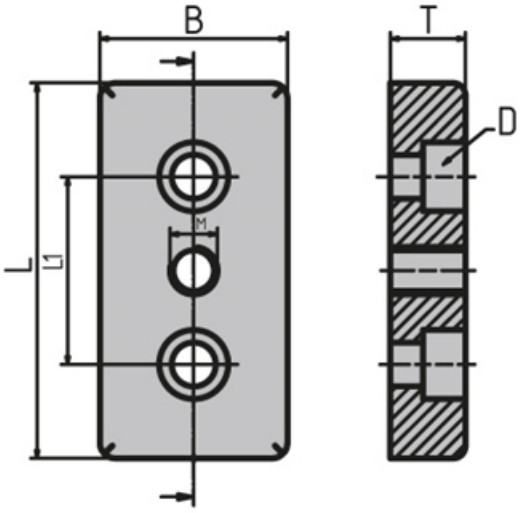

Every care has been taken to ensure the accuracy of the information in this document, but we take no liability for any errors or omissions. We reserve the right to make changes without prior notice.

General Data

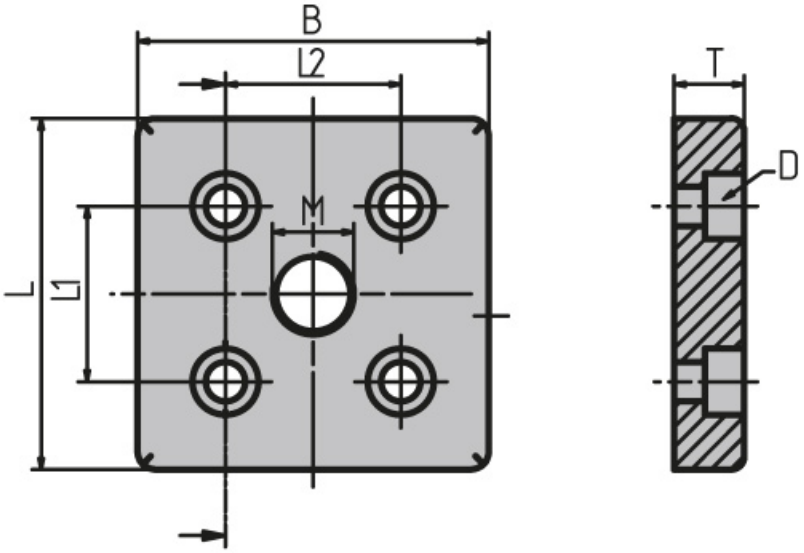

Designation	Thread	D	B x L	L1	L2
PZ2315	M10	7 (M6)	30 × 60	30	-
PZ3020	M12	7 (M6)	30 × 60	30	-
PZ3025	M16	7 (M6)	30 × 60	20	-
PZ4015	M10	5.5 (M5)	40 × 40 (slot 5)	20	-
PZ4020	M12	5.5 (M5)	40 × 40 (slot 5)	20	-
PZ4025	M16	5.5 (M5)	40 × 40 (slot 5)	20	-
PZ3035	M10	7 (M6)	60 × 60	30	30
PZ3040	M12	7 (M6)	60 × 60	30	30
PZ3045	M16	7 (M6)	60 × 60	30	30

Designation	T
PZ2315	12
PZ3020	12
PZ3025	12
PZ4015	12
PZ4020	12
PZ4025	12
PZ3035	12
PZ3040	12
PZ3045	12

Every care has been taken to ensure the accuracy of the information in this document, but we take no liability for any errors or omissions. We reserve the right to make changes without prior notice.